Ljudteknik projekt 3

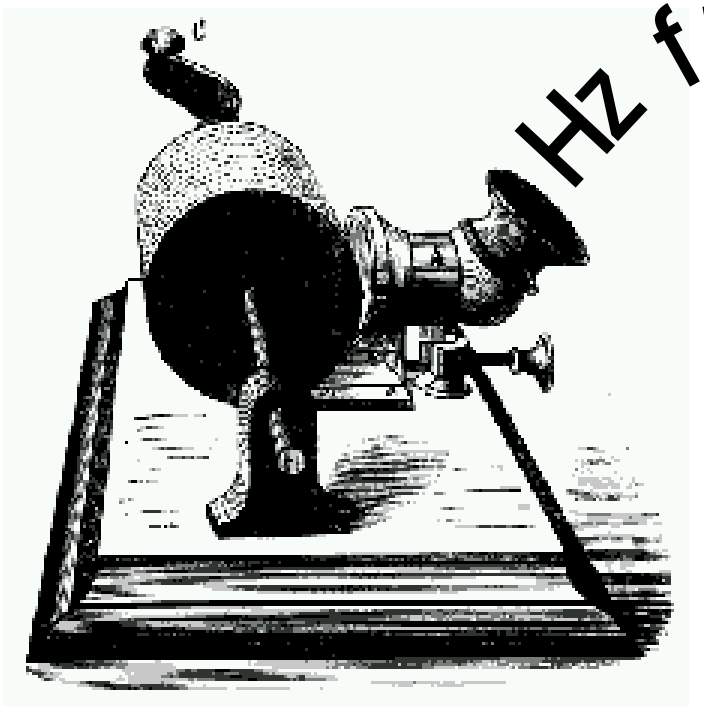

Hz from Scratch

Ljudteknik projekt 3

- Innehåll
  - Mikrofonteknik
    - Kontrabas
    - Akustisk Gitarr
    - Sång
    - Blåsinstrument
    - Diverse Slagverk
    - Synt, Orgel, Piano

Kontrabas

- U47 nära golvet, ger en varmare ”basigare” upptagning

Kontrabas

- U47 rakt framför stallet, kan flyttas en bit ovanför, ger en mer tigth och fokuserad upptagning

Kontrabas

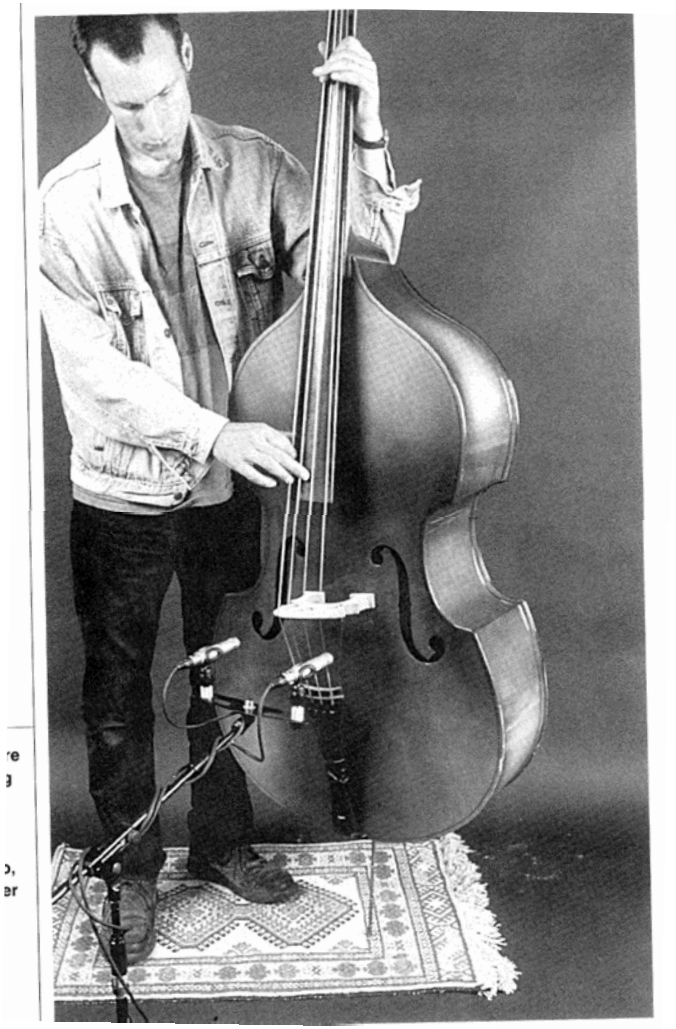

- Stereo uppmickning med 2 st KM84 används ex av Jazz basister

Kontrabas

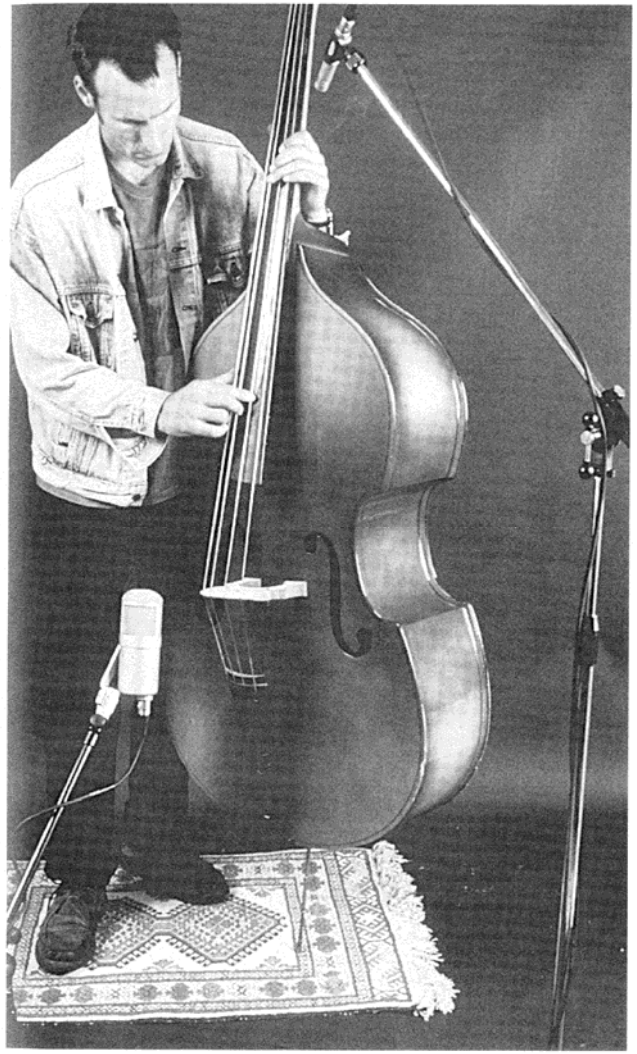

- Fångar upp ”anslaget” av strängarna, vilket ger en mer levande och realistisk upptagning av instrumentet.

Akustisk Gitarr

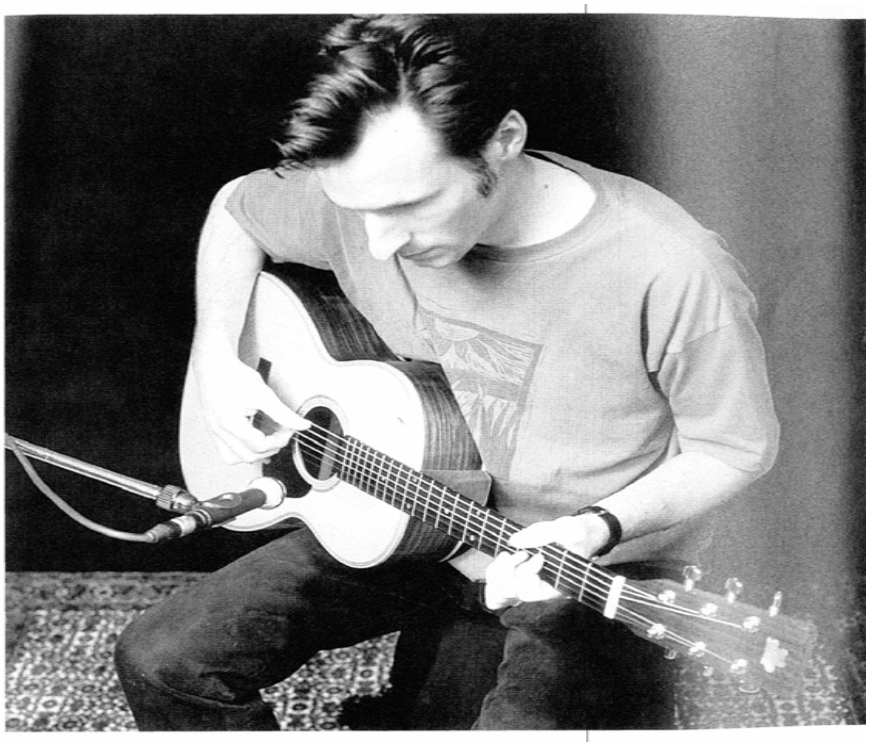

- ”BBC-mono”

Akustisk Gitarr

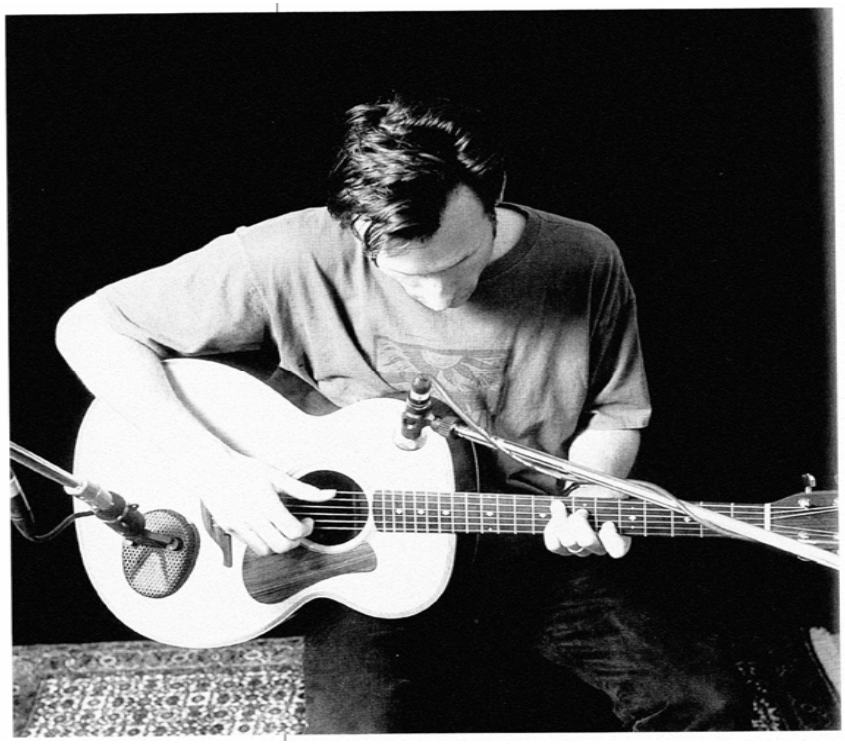

- Mixat monopar
  - Varmare ton V-mick
  - Ljusare ton H-mick

a)AKG C28 ”stallet”,b) Andy Lawrence tube type B ”halsen” C) båda mixade

Akustisk Gitarr


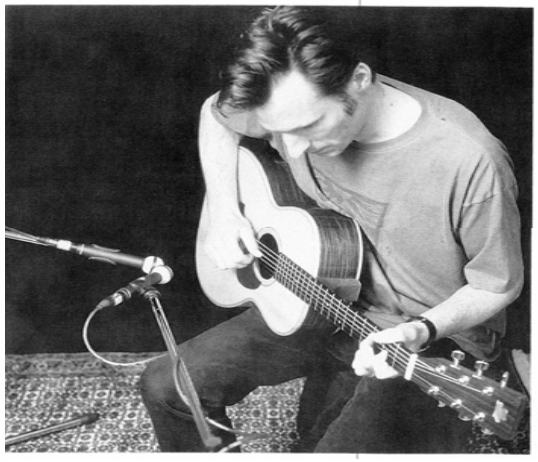

- Stereo mickning
  - AB
  - XY
  - MS (mitt-sida)
  - Dummy head

Sång

- Avstånd 15-20 cm, ngt tiltad för att eliminera s-ljud. Puffskydd viktigt, membranet är känsligt inte bara för puffar, kletigt saliv är inte heller roligt
- När mikrofonen inte används trä en plastpåse över så att inte damm fastnar på membranet.

Sång

- Avstånd några centimeter, många dynamiska mikrofoner har basavskärning vilket gör att proximity effekten inte blir så påtaglig. Prova sig fram!

Sång

SÅ LYCKAS DU MED SÅNGINSPELNINGEN

Rummet – Minst tio kvadratmeter. Gärna högt i tak.
Mikrofonen – Hitta en mikrofon som framhäver klangen i sångarens röst men ta också hänsyn till vilken sorts musikbakgrund sången spelas in för.
Puffar – Puffskydd eller penntricket – tejpa fast en vanlig penna över membranet.
S-ljud – Vinkla micken så att den inte står i 90° vinkel mot sångaren.
Röstens kärna – Spektrumanalysatorn hjälper dig hitta frekvenserna med mest energi.
Mickförstärkare – Gör större skillnad än man tror. Köp för allt vad ekonomin tillåter.
Kompressorinställningar – För att jämna till rösten: 2–3 dB kompression. Inte för snabba attack- och releasetider.
Eq – Skär allt under 100 hertz. Gröp eventuellt ur runt 200 hertz. Tydligheten hittar du mellan 1 och 4 kilohertz. Liten lättning uppåt 10 kilohertz för att få lite väsighet och lyster.

- Råd från MusikerMagasinet
- Penntricket skyddar inte micken från Saliv!

Sång

Figure 5-4

Miking a Chorus or Large Vocal Group

"Don't forget to keep the 3:1 rule in mind, listening for phase cancellation problems and excessive room reverb."

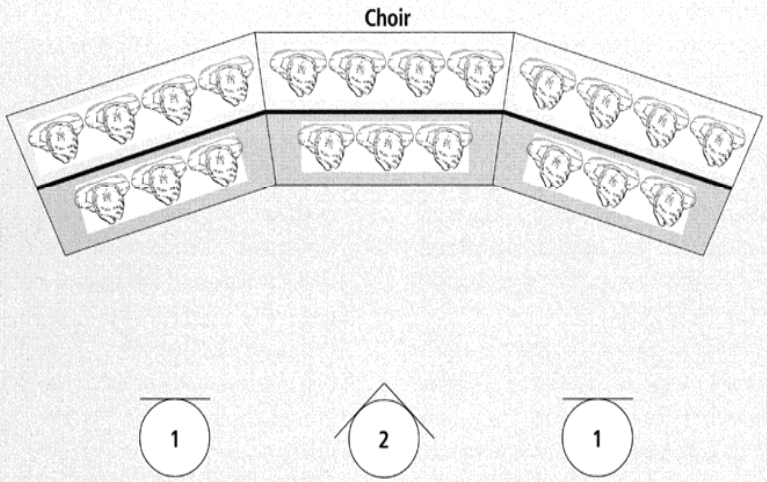

Figure 5-3

Backup Vocal Recording With One Omnidirectional Mic

"On the positive side, the vocalists can stand around an omni mic, using visual cues (as well as those from the headphone mix) to help shape their performance.

…the one mic method takes more work on the part of the vocalists, and the blend can't be fixed in the mix. Even so, it's often well worth the effort to get the team working as a single instrument."

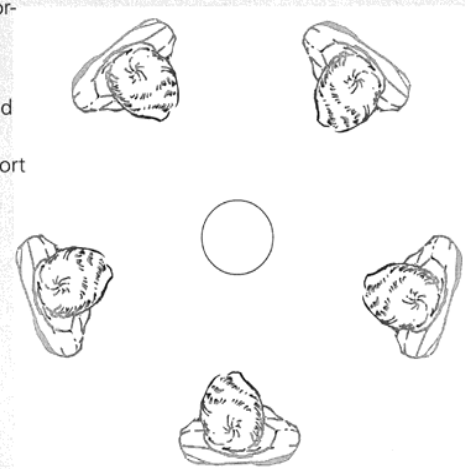

Blåsinstrument

Figure 4-32

Trumpet

"Because of the high sound pressure levels that can be encountered during a trumpet passage (up to 155 dB SPL), it's best to place a mic slightly off-center to the bell, at a distance of 1' or more. When closer placement is needed, a 10–20 dB pad can be inserted to prevent mic overload. Under such close working conditions, a windscreen helps protect the diaphragm from excessive windblasts"

Figure 4-22

Horn section

Horn sections are usually grouped by instrument: trumpets, trombones, saxes, etc. In the studio, these groupings can be separated into seated rows, with cardioid mics positioned in front of 2–4 instruments. Mics are typically placed at a distance where they naturally pick up each instrument in the section (often 3–4'), while minimizing the pickup of other sections (Mic 1).

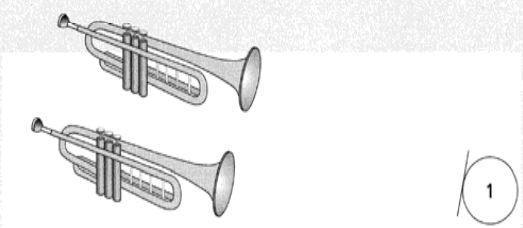

Trumpet, Horn

Trumpet

Trombon

Blåsinstrument

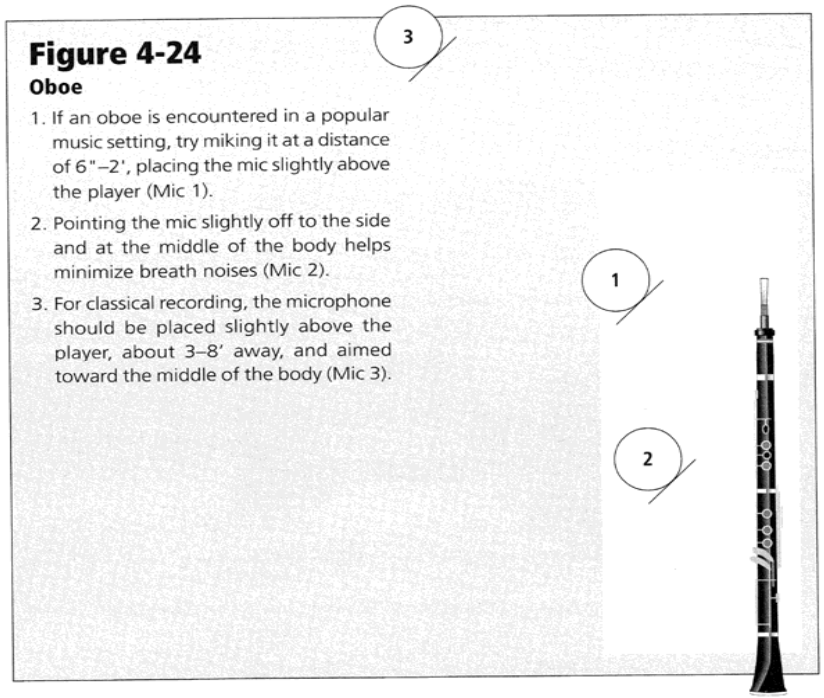

Figure 4-24

Oboe

1. If an oboe is encountered in a popular music setting, try miking it at a distance of 6"–2', placing the mic slightly above the player (Mic 1).
2. Pointing the mic slightly off to the side and at the middle of the body helps minimize breath noises (Mic 2).
3. For classical recording, the microphone should be placed slightly above the player, about 3–8' away, and aimed toward the middle of the body (Mic 3).

- Oboe
  - Upptagning från sidan ej rakt framifrån

Blåsinstrument

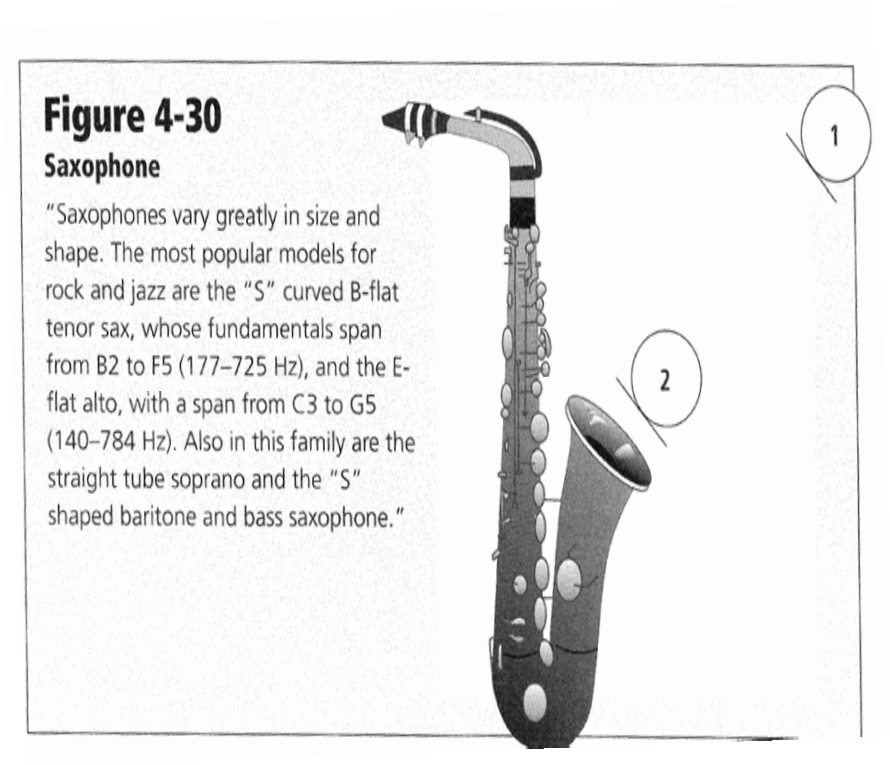

- Saxofon

Blåsinstrument

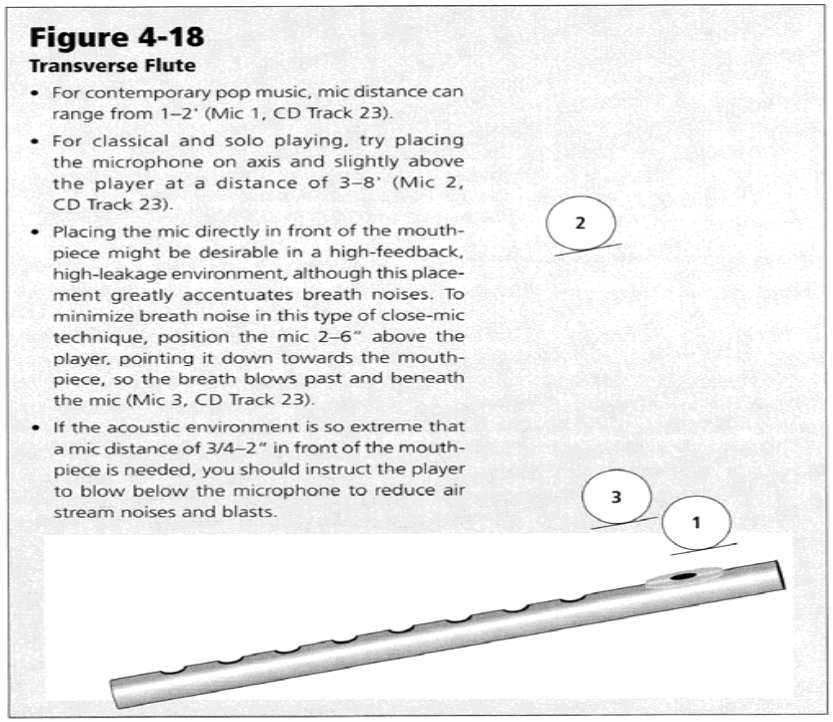

Figure 4-18

Transverse Flute

- For contemporary pop music, mic distance can range from 1–2' (Mic 1, CD Track 23).
- For classical and solo playing, try placing the microphone on axis and slightly above the player at a distance of 3–8' (Mic 2, CD Track 23).
- Placing the mic directly in front of the mouthpiece might be desirable in a high-feedback, high-leakage environment, although this placement greatly accentuates breath noises. To minimize breath noise in this type of close-mic technique, position the mic 2–6" above the player, pointing it down towards the mouthpiece, so the breath blows past and beneath the mic (Mic 3, CD Track 23).
- If the acoustic environment is so extreme that a mic distance of 3/4–2" in front of the mouthpiece is needed, you should instruct the player to blow below the microphone to reduce air stream noises and blasts.

- Flöjt

Blåsinstrument

Figure 4-9
Clarinet

1. If the player holds the instrument correctly, the best mic placement is to aim at the lower finger holes at a distance of 6–12" (Mic 1, CD Track 13). In this way, the sounds originating from the finger holes and the bell are picked up with equal intensity.
2. If isolation is needed, to reduce leakage from other instruments, placing a mic or lapel mic near the instrument's bell will produce acceptable results (Mic 2, CD Track 13). Be aware that all the sound doesn't come out of the bell, rather the level of the notes tends to decrease as they move down the scale. For this reason, a standard mic, with a flat frequency response, would provide better results than a clip or lapel mic, which is typically rolled off in the low end. Using a compressor might help even out the note-to-note level differences that are often encountered when miking a woodwind bell (See Chapter 7: *Outboard Stuff*).

- Klarinett

Blåsinstrument

Figure 4-6
Bassoon

1. Because of its length, to achieve balanced pickup, the mic should have a broad pickup pattern and be placed far enough away to pick up the entire instrument evenly. Try a large diaphragm condenser mic placed 2–4' away, in either an omnidirectional or cardioid pattern, pointed at about the middle of the keys (Mic 1, CD Track 10). Again, use your ears and find a spot that gives good balance.
2. If isolation is needed to reduce leakage from other instruments, placing a mic or lapel mic near the instrument's bell will provide acceptable results (Mic 2, CD Track 10). You should be aware that all the sound doesn't come out of the bell; rather, the level of the notes tends to increase as they move down the scale. For this reason, a clip or lapel mic would do better than a standard mic as the low-end response tends to be rolled off. Using a compressor might help even out the note-to-note level differences that are often encountered when miking a woodwind bell (See Chapter 7: *Outboard Stuff*).

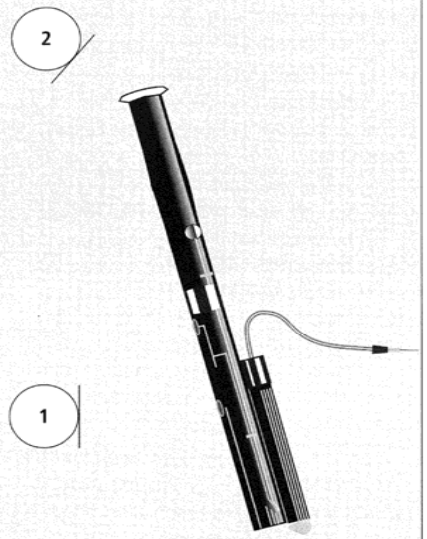

- Fagott

Diverse Slagverk

Figure 4-27

Conga drum

1. Placing the mics close to the top head, about 1–3" above, and 2" in from the rim, produces a tight, dead sound with minimal shell resonance and enhanced head attack (Mic Setup 1, CD Track 29).
2. The mic distance above the head can be increased to about 10" for a more "live" sound (Mic Setup 2, CD Track 29).

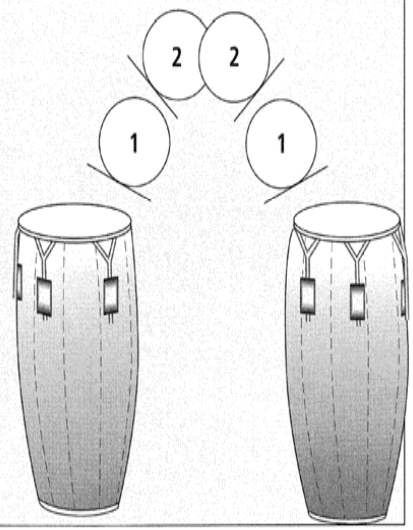

- Kongas

Diverse Slagverk

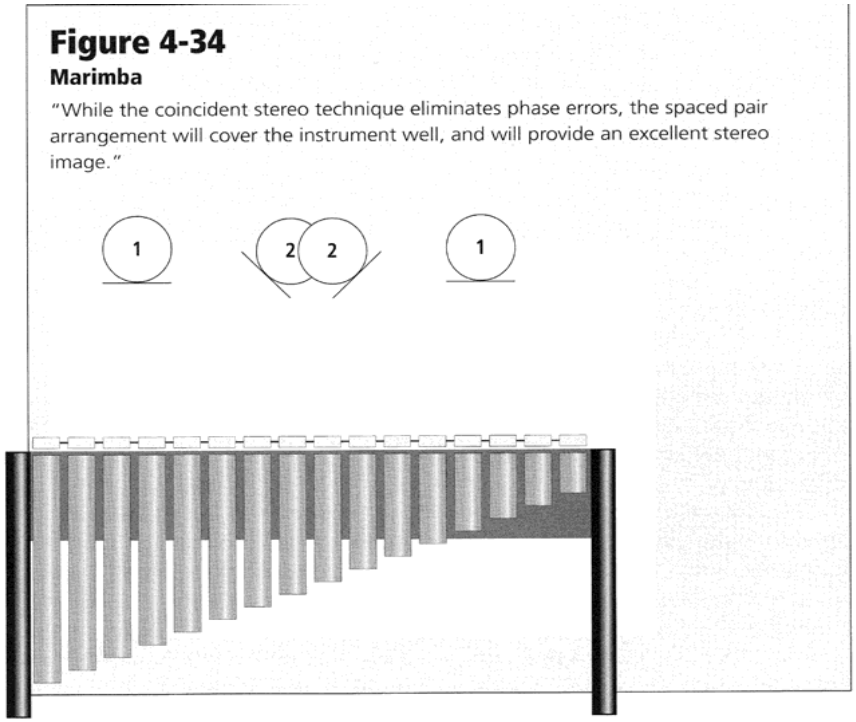

- Marimba

Diverse Slagverk

Figure 4-7
Bodhran

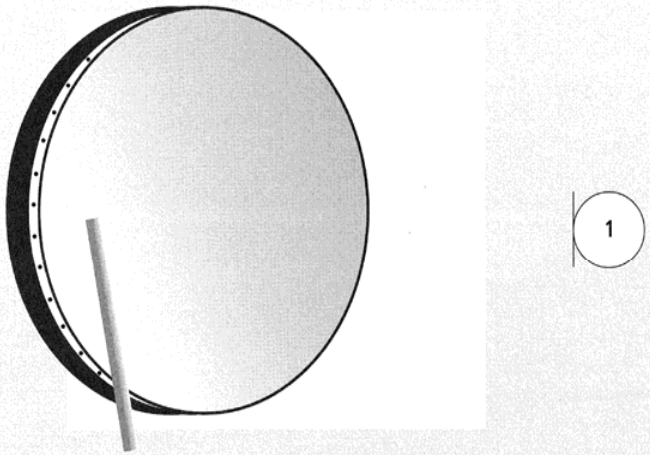

"One of the best techniques is to close-mike it about 6–18" in front of the rim with the bass roll-off switched on at the mic or on the console's input strip. The roll-off will help you minimize the boom, which obscures the beat, and will help pick up the skin tone which defines the beat."

- ”Trolltrumma”

Synt, Orgel, Piano

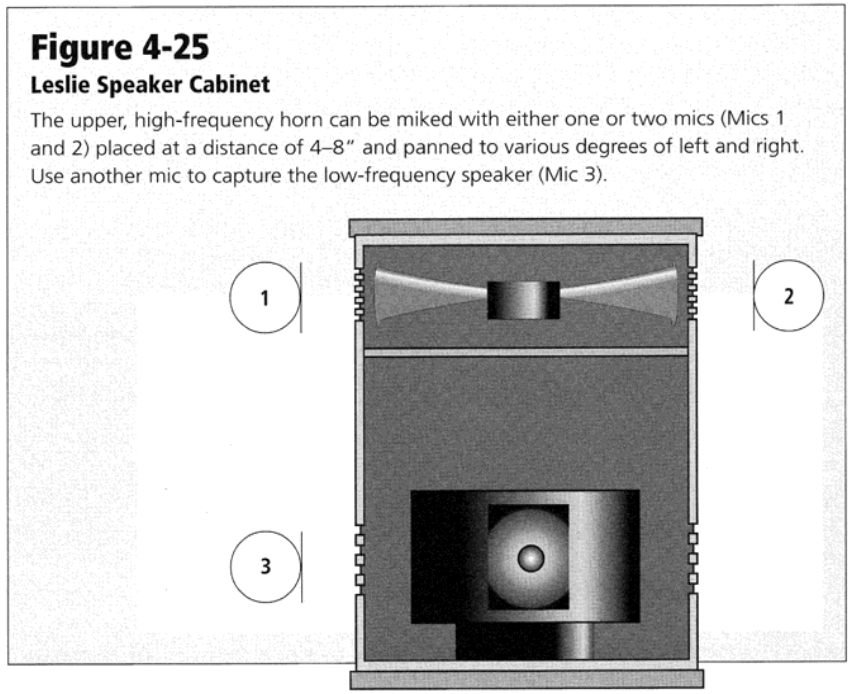

Figure 4-25
Leslie Speaker Cabinet
The upper, high-frequency horn can be miked with either one or two mics (Mics 1 and 2) placed at a distance of 4–8" and panned to various degrees of left and right. Use another mic to capture the low-frequency speaker (Mic 3).

- Leslie kabinett
  - Minst två mikrofoner, en bas och en diskant
  - Helst alla tre
  - 90° mellan topmickarna
  - Kan även användas till sång gitarr etc

Synt, Orgel, Piano

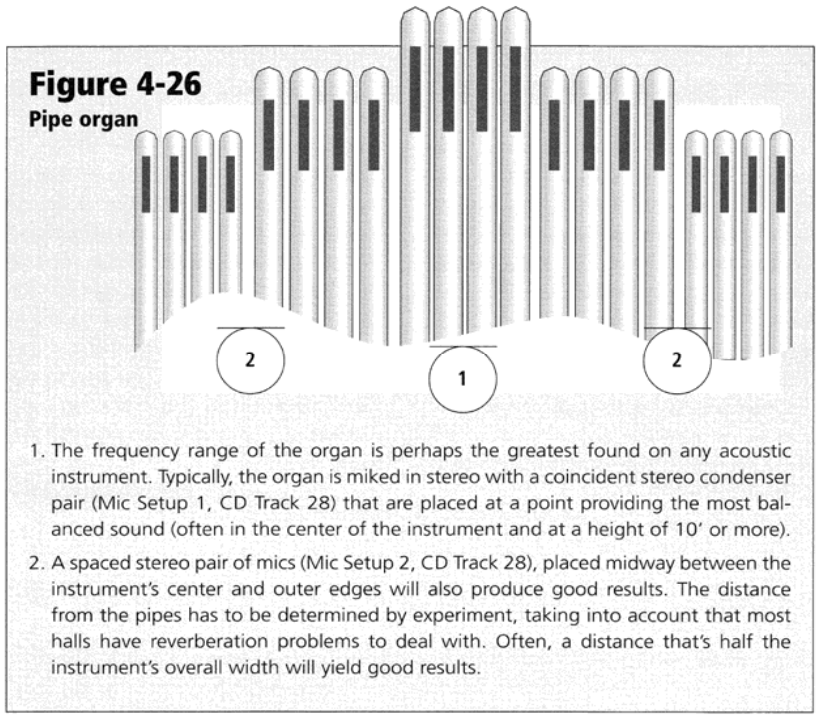

- Orgel
  - Har ett mycket stort frekvensområde
  - Inget ovanligt med bas ner till 30hz eller under i vanliga kyrkorglar
  - Stora kyrkorglar sträcker sig från 16Hz(!) till ca 10kHz dvs en hel oktav lägre och strax mer än en oktav högre än en konsertflygel.

Synt, Orgel, Piano

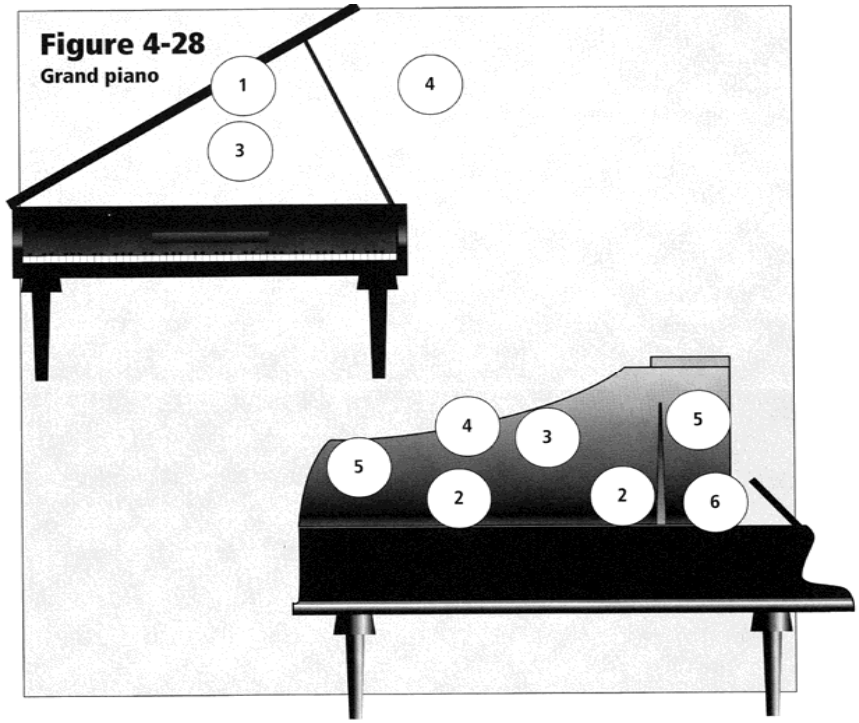

- Flygel

Synt, Orgel, Piano

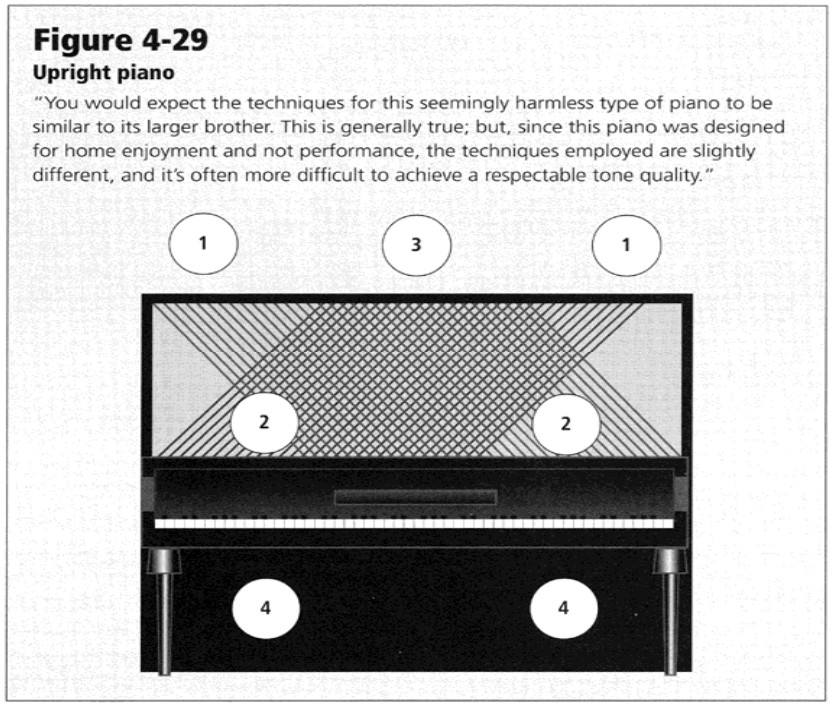

- Piano

Synt, Orgel, Piano

Inspelning i trapphuset. Närmickning med en Shure SM57 och en Laney gitarrcombo, och en Blue Baby Bottle som ambience-mick.

- Synt,elektroniska instrument
  - Line box, skiljer galvaniskt
    - direkt för varje instrument
    - eller efter mixer
  - Högtalar/förstärkarsimulator
    - se line box
  - Uppmickat via gitarrförstärkare, högtalare, här gäller samma tips som för gitarrförstärkare